CHEVIOT
PRODUCTS INC.

REGENCY Footed Tub | #2112 & #2114 | Overall Length 72"

1-800-444-5969

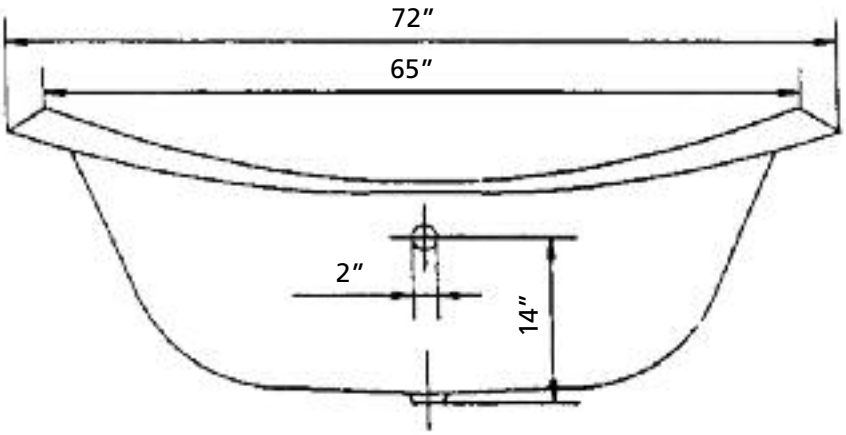

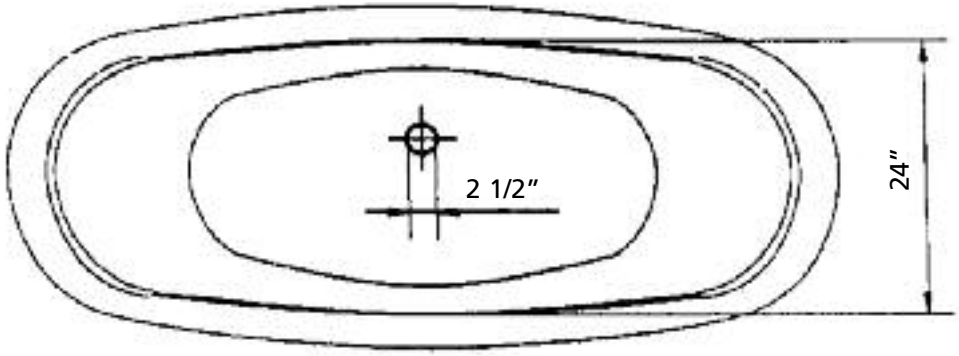

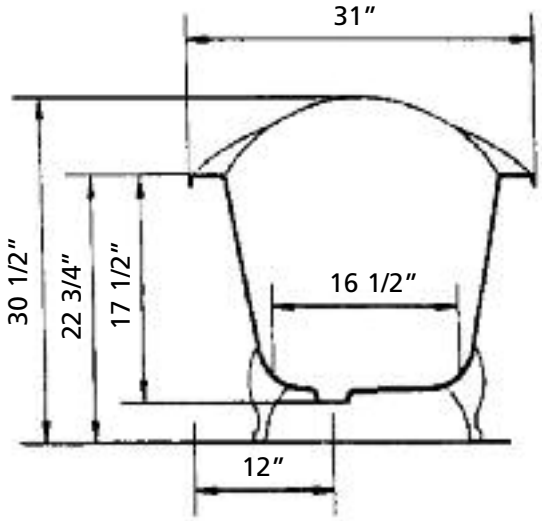

Note: Rough-in dimensions may vary +/- 1/2" and are subject to change. No responsibility is assumed by Cheviot Products Inc.

CHEVIOT
PRODUCTS INC.

1-800-444-5969

REGENCY Cast Iron Bath | #2148 | Overall Length 61"
REGENCY Cast Iron Bath with Lion Feet | #2150 | Overall Length 61"

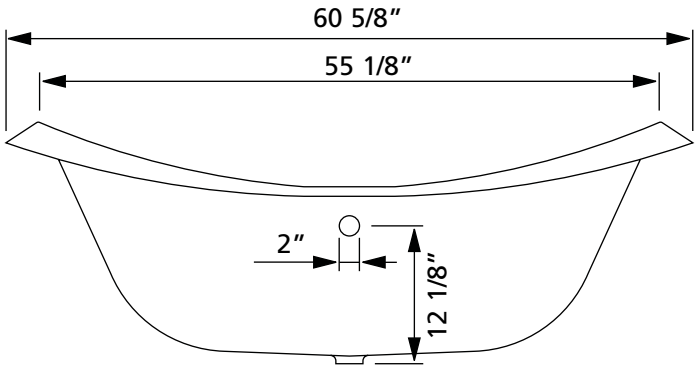

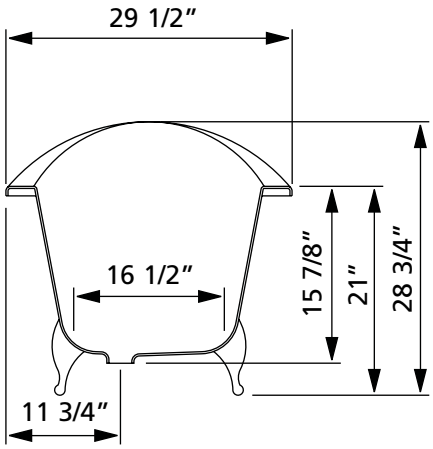

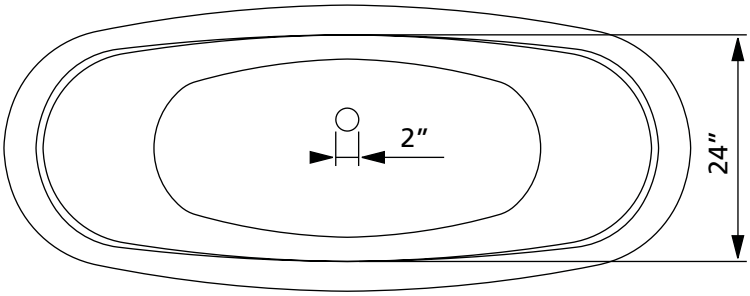

Note: Rough-in dimensions may vary +/- 1/2" and are subject to change. No responsibility is assumed by Cheviot Products Inc.