CHEVIOT PRODUCTS INC.

1-800-444-5969

MATRIX Wall Hung Water Closet | #837

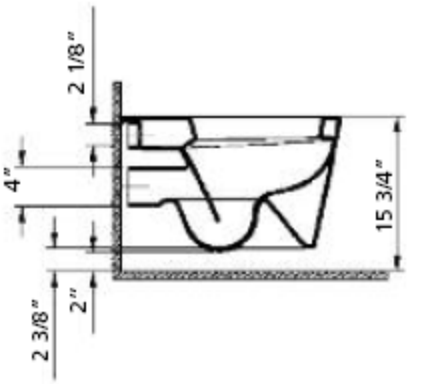

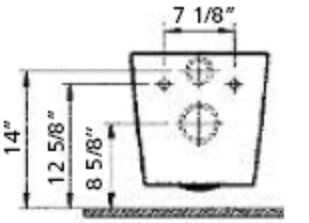

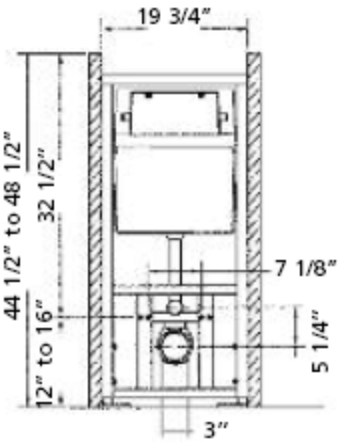

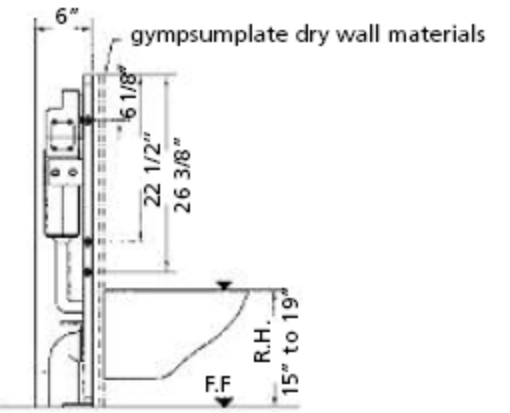

Note: Rough-in dimensions may vary +/- 1/2" and are subject to change. No responsibility is assumed by Cheviot Products Inc.