CHEVIOT PRODUCTS INC.

1-800-444-5969

WALL HUNG Water Closet | #805

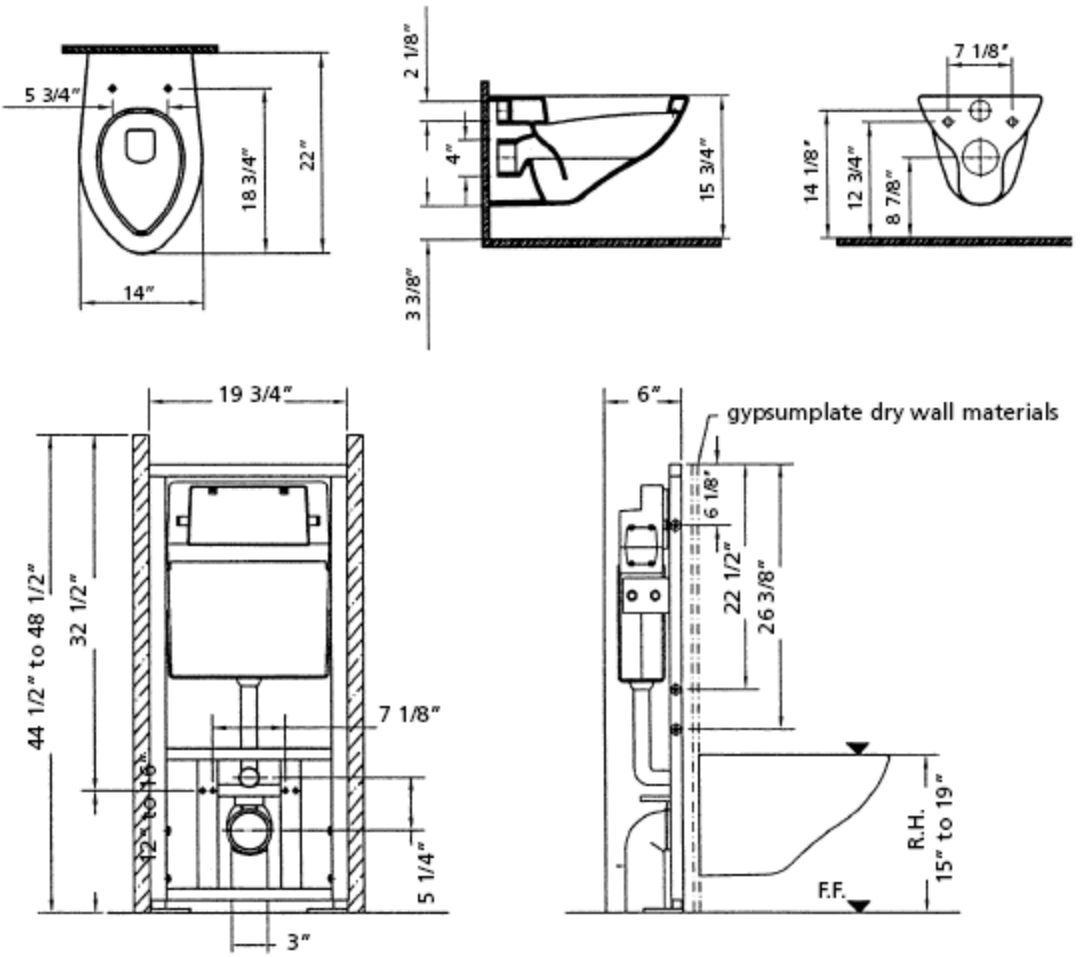

Note: Rough-in dimensions may vary +/- 1/2" and are subject to change. No responsibility is assumed by Cheviot Products Inc.

CHEVIOT PRODUCTS INC.

604-464-8966

WALL HUNG Water Closet with Stainless Steel Control Panel | #819

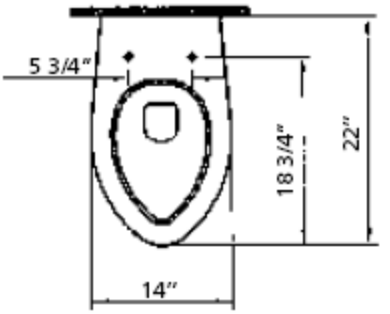

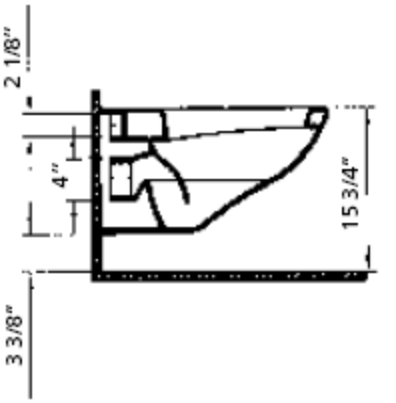

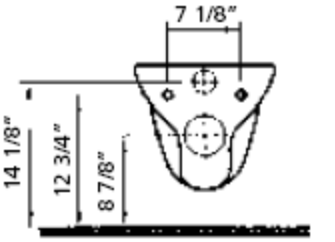

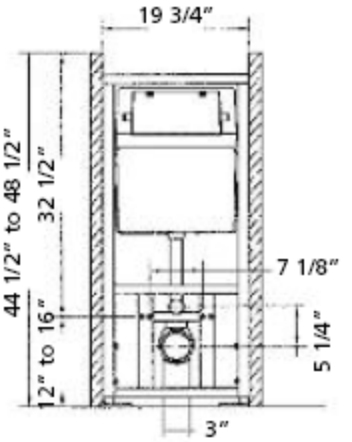

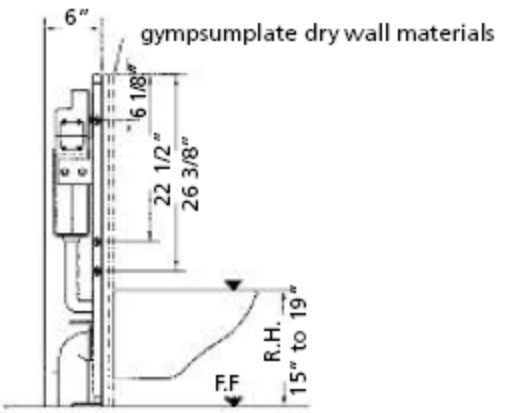

Note: Rough-in dimensions may vary +/- 1/2" and are subject to change. No responsibility is assumed by Cheviot.